D0
D1
D2
D3
E0/1
E2/3
Q0
Q0
Q1
Q1
Q2
Q2
Q3
Q3
16
1
15
14
10
11
9
8
0
1
1
0
0
1
0
1

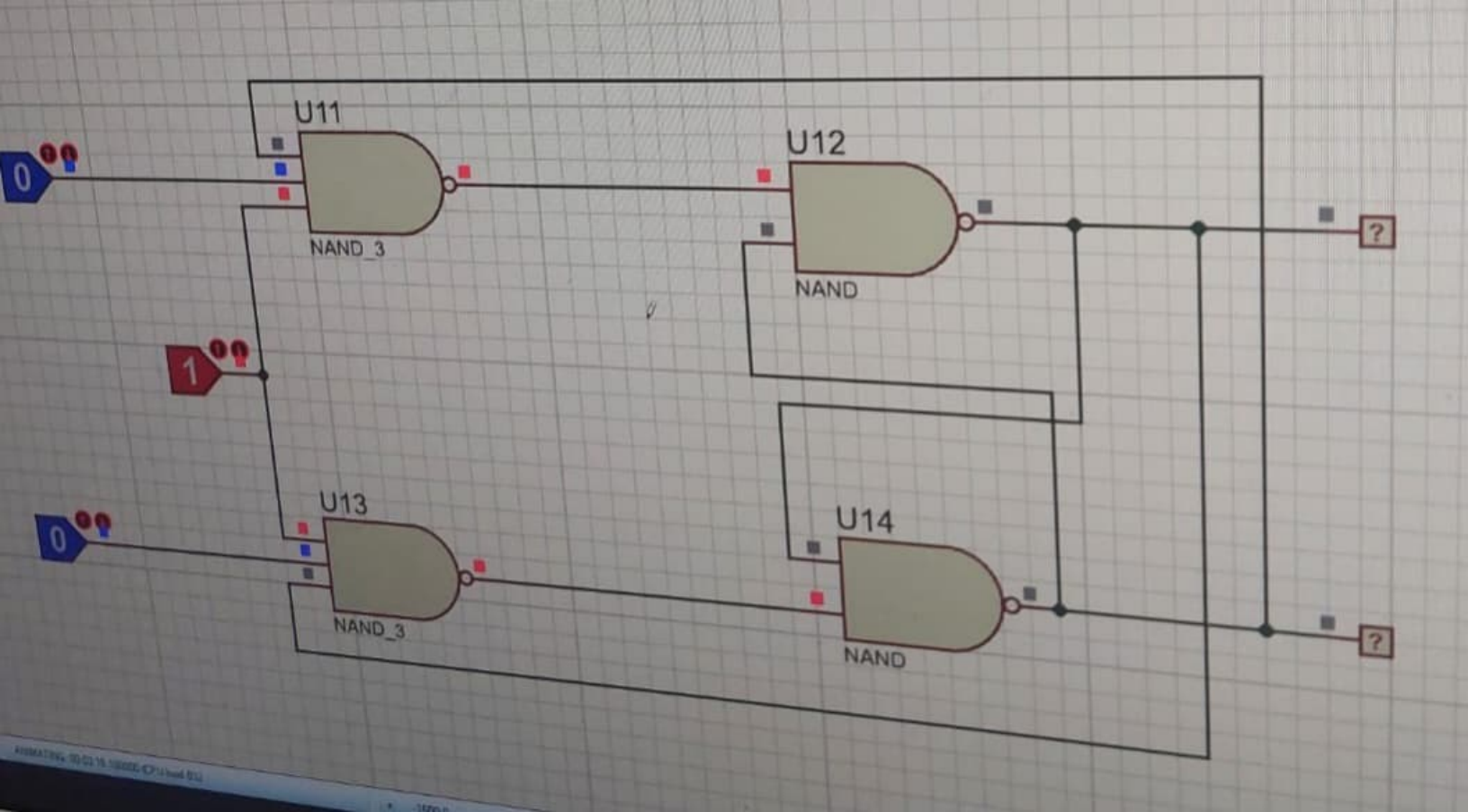
U11
NAND_3
U12
NAND
U13
NAND_3
U14
NAND
0
1
0
?
?

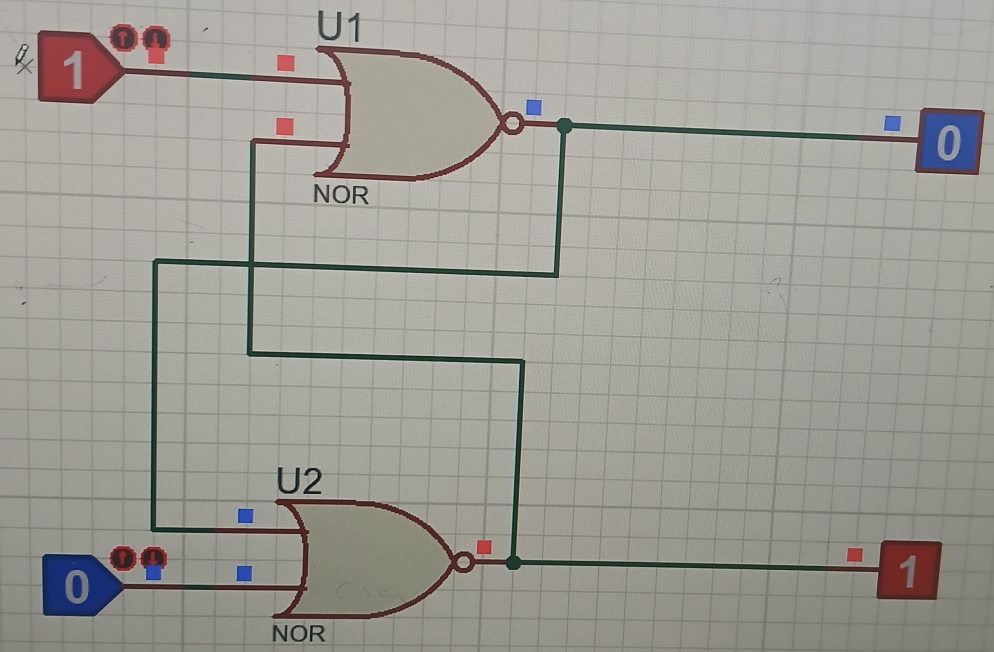
U1
1
0
NOR
U2
0
1
NOR

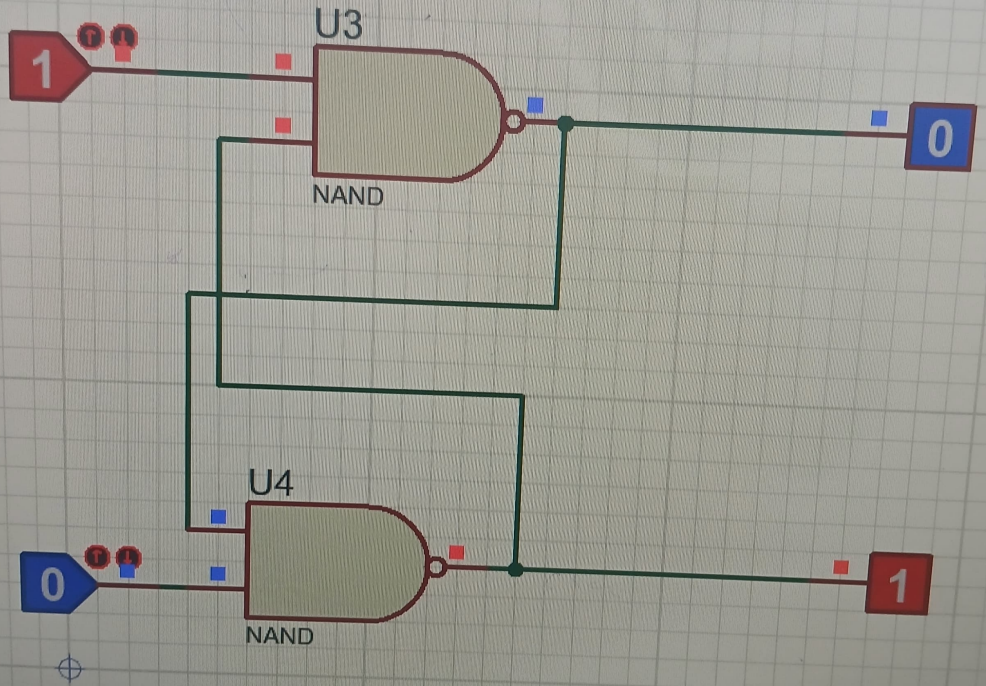
U3
1
0
NAND
U4
0
1
NAND

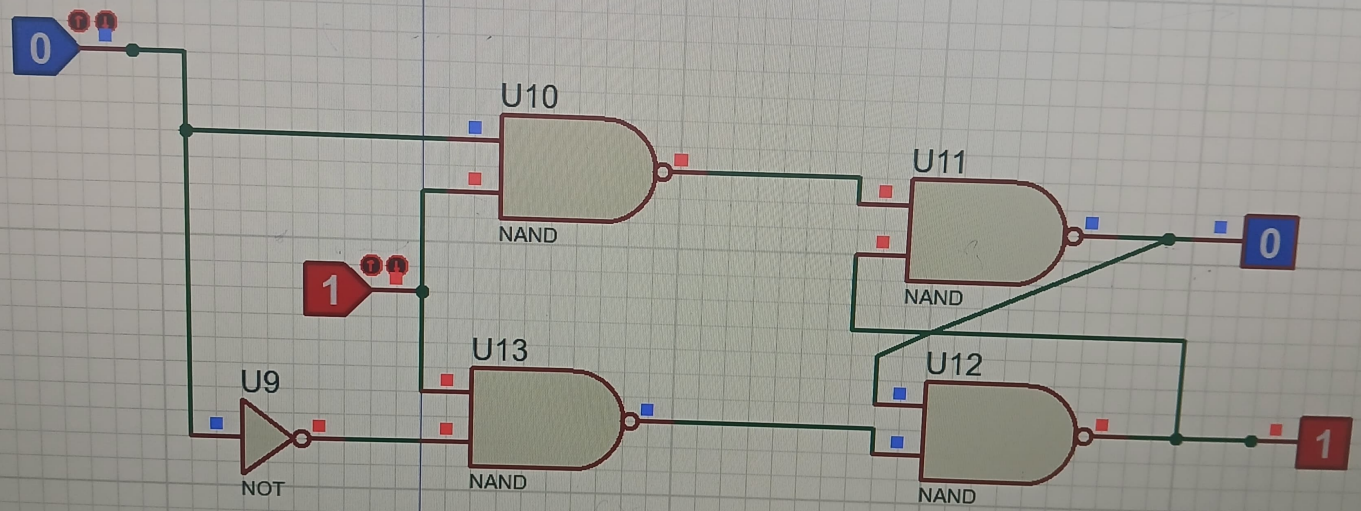
0
1
U10
NAND
U11
NAND
0
U9
NOT
U13
NAND
U12
NAND
1

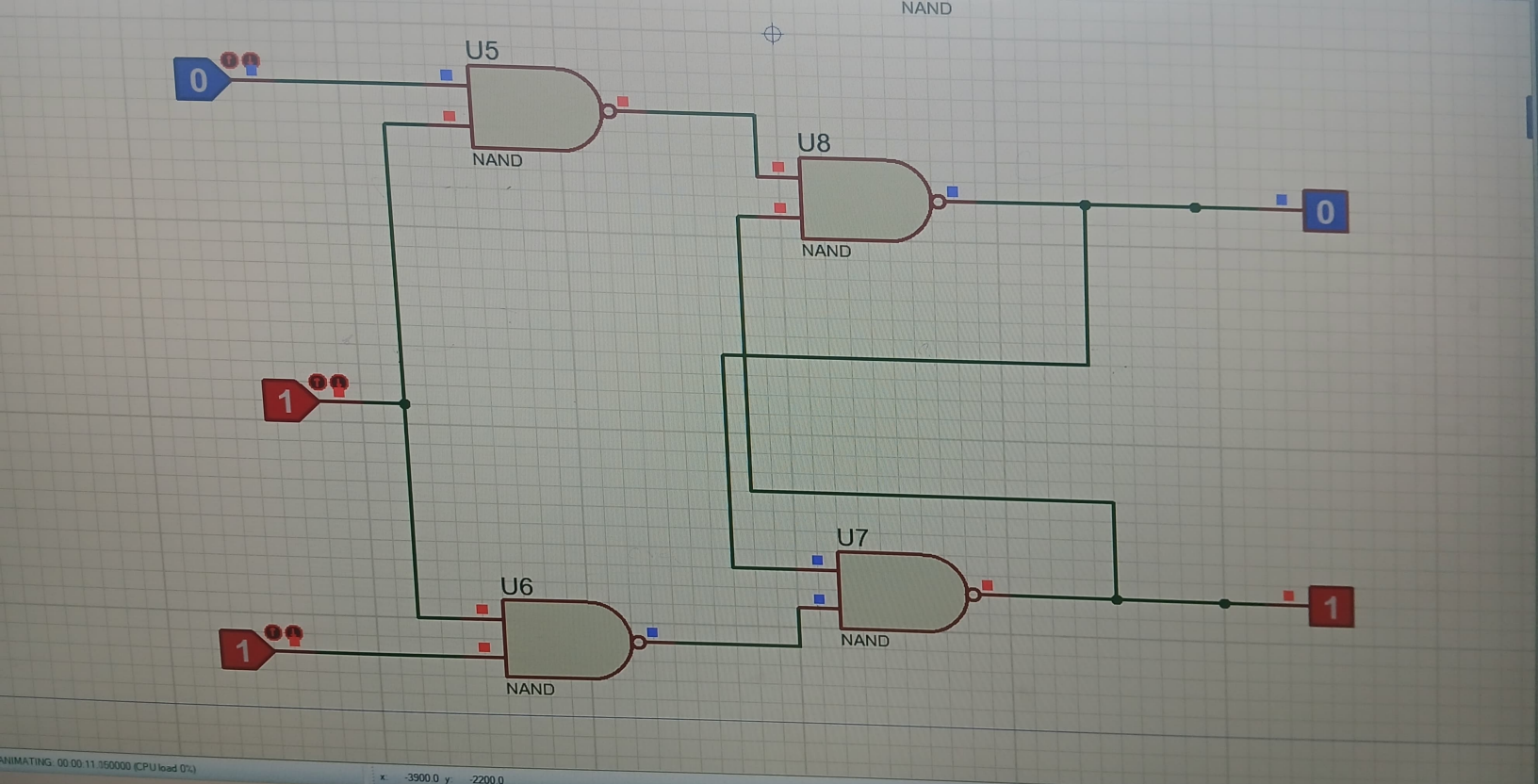
NAND
U5
NAND
U8
NAND
U6
NAND
U7
NAND
0
0
1
1
1
ANIMATING 00:00:11.350000 (CPU load 0%)
x: -3900.0 y: -2200.0
Search

DATE: / /20

| R | S | Q | $\bar{Q}$ | Action |
|---|---|---|---|---|
| 0 | 0 | 1 | | last state |
| 0 | 1 | 1 | 0 | 1 |
| 1 | 0 | 0 | 1 | 0 |
| 1 | 1 | 0 | 0 | 1 |

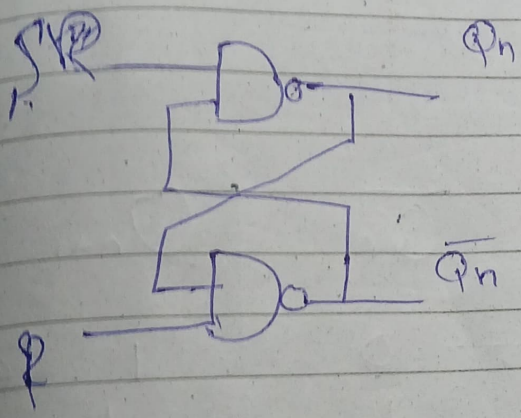


| S | R | Qn | $\bar{Qn}$ | Qn+1 |
|---|---|---|---|---|
| 0 | 0 | 0 | | |
| 0 | 0 | 1 | 1 | 1 |
| 0 | 1 | 0 | | |
| 0 | 1 | 1 | 1 | 0 |
| 1 | 0 | 0 | 1 | 0 |
| 1 | 0 | 1 | | |
| 1 | 1 | 0 | 1 | 0 |
| 1 | 1 | 1 | | |
| 0 | 0 | 1 | 1 | 1 |
| 0 | 1 | 1 | 0 | 1 |
| 1 | 0 | 0 | 1 | 0 |
| 1 | 1 | 0 | 1 | 0 |

invalid Reset

reset

YOUSAF PAPER

DATE: / /20

# Task 2. GATED SR Flipflop

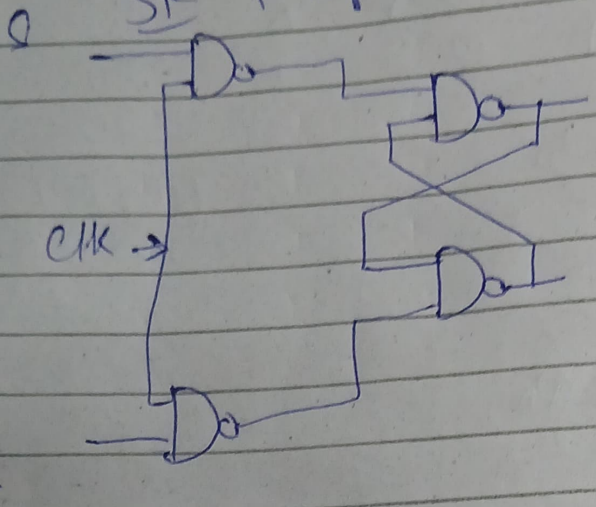


| CLK | S | R | $Q_n$ | $\overline{Q_n}$ | $Q_{n+1}$ |
|---|---|---|---|---|---|
| 1 | 0 | 0 | 0 | | |
| 1 | 0 | 0 | 1 ~~Last state~~ | 0 | 1 Last state |
| 1 | 0 | 1 | 0 | 1 | 1 |
| 1 | 0 | 1 | 1 | | |
| 1 | 1 | 0 | 0 | | |
| 1 | 1 | 0 | 1 | 0 | 1 |
| 1 | 1 | 1 | 0 | | |
| 1 | 1 | 1 | 1 | 1 | 0 |
| 0 | X | X | | | |

YOUSAF PAPER

DATE: / /20

# D - Flip Flop

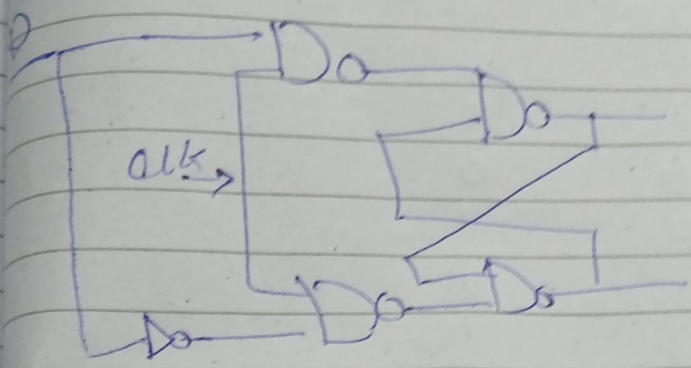


| Clk | D | $Q_n$ | $\overline{Q}_n$ | $Q_{n+1}$ |
|---|---|---|---|---|
| 1 | 0 | 0 | 1 | 0 |
| 1 | 0 | 0 | 1 | |
| 1 | 1 | 0 | 1 | 0 |
| 1 | 1 | 1 | | |
| 0 | X | X | | |

# JK FlipFlop

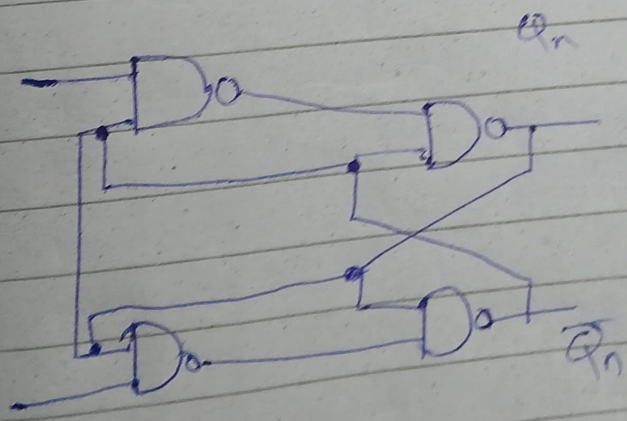


YOUSAF PAPER

Week 14
Lab 7 - Lab

05/06/2025

# Lab 14

## Task 1

| S | R | $Q_n$ | $\overline{Q_n}$ |
|---|---|---|---|
| 1 | 0 | 1 | 0 |
| 0 | 0 | | No change |
| 0 | 1 | 1 | 0 |
| 0 | 0 | | |
| 1 | 1 | | |

| | | | |
|---|---|---|---|
| 1 | 0 | 1 | 0 |
| 1 | 1 | 1 | 0 |
| 0 | 0 | 0 | 1 |

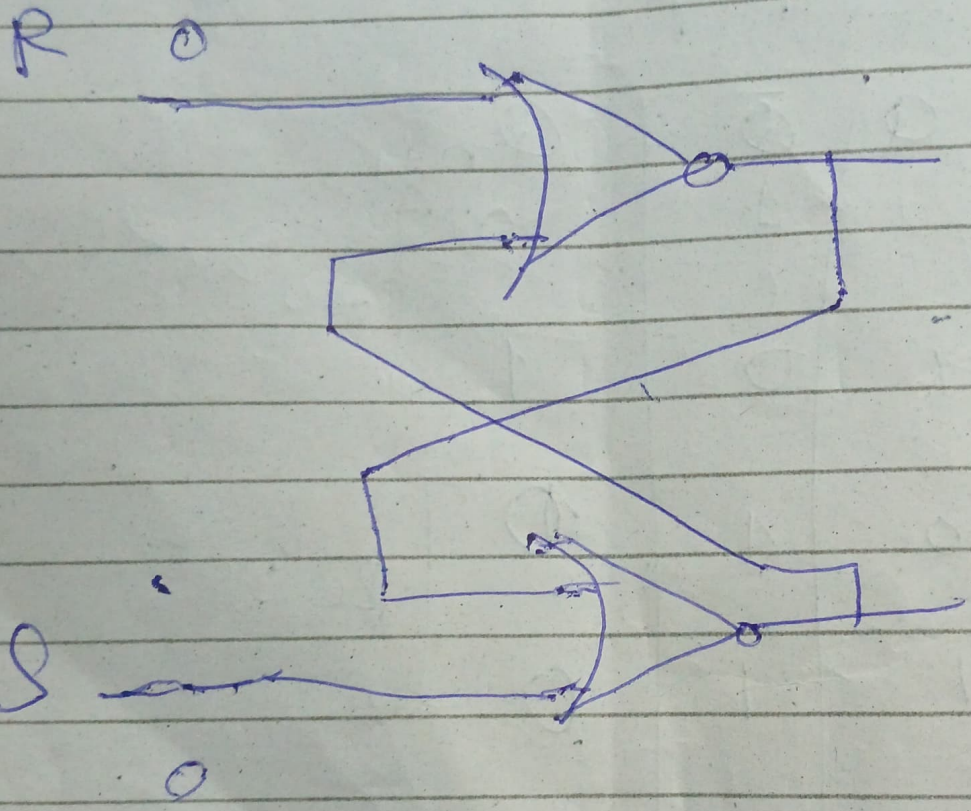


YOUSAF PAPER